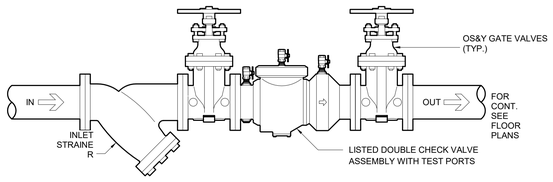

NOTES:

1. UNLESS OTHERWISE NOTED MOUNTING HEIGHT SHALL BE BETWEEN 42" ABOVE THE FINISHED FLOOR AND 12" CLEAR AROUND ALL SIDES

1 DOUBLE CHECK VALVE ASSEMBLY DETAIL

SCALE: NOT TO SCALE

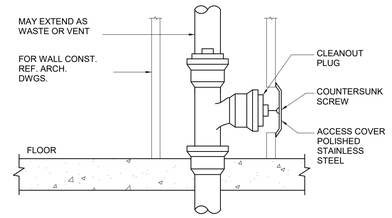

5 WALL CLEANOUT DETAIL

SCALE: NOT TO SCALE

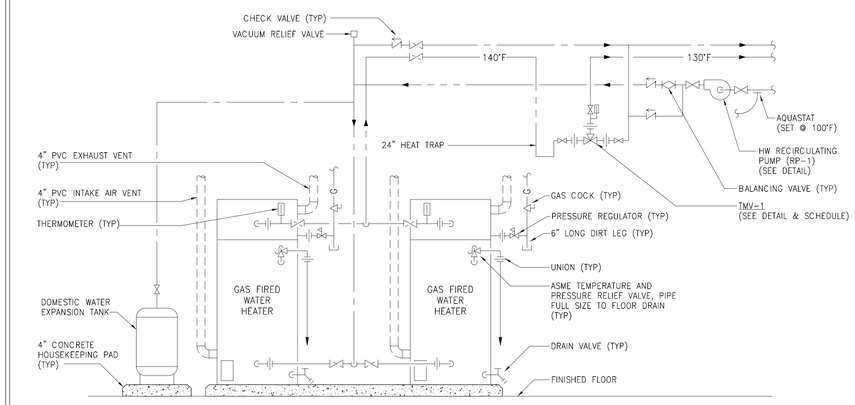

NOTES:

1. INSTALL PER MANUFACTURER'S RECOMMENDATIONS.
2. ALL CHECK VALVES, MULTI-PURPOSE VALVES TO BE INSTALLED IN THE HORIZONTAL POSITION ONLY.
3. IN-LINE RE-CIRC. PUMPS SHALL BE INSTALLED AT 66" AFF.
4. MAINTAIN CLEARANCES TO COMBUSTIBLES AS REQUIRED BY WATER HEATER MANUFACTURER.
5. ALL PUMPS MUST BE BALANCED TO SCHEDULED FLOW RATES.
6. VENT AND COMBUSTION AIR TERMINATIONS MUST BE SEPARATED PER NFPA-54 AND MANUFACTURER'S RECOMMENDATIONS.
7. MANIFOLD WATER HEATERS PER MANUFACTURER'S RECOMMENDATIONS TO MAINTAIN A HYDRAULICALLY BALANCED SYSTEM.

8 DUPLEX GAS FIRED WATER HEATER DETAIL

SCALE: NOT TO SCALE

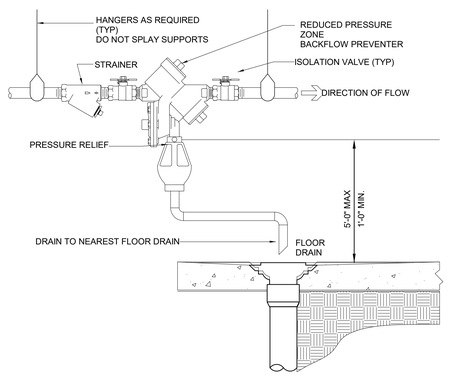

2 TYPICAL BFP (UNDER 2 INCH DIAMETER) INSTALLATION DETAIL

SCALE: NOT TO SCALE

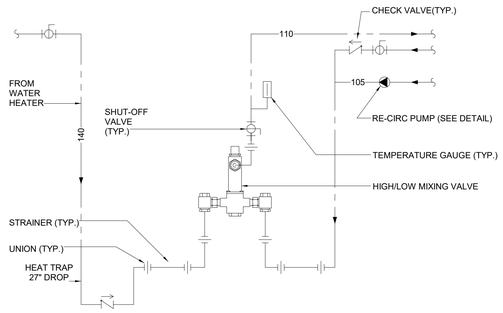

NOTE:
FOR PIPE SIZES SEE SCHEDULE AND/OR RISER DIAGRAM (TYPICAL)

6 THERMOSTATIC MIXING VALVE PIPING DETAIL

SCALE: NOT TO SCALE

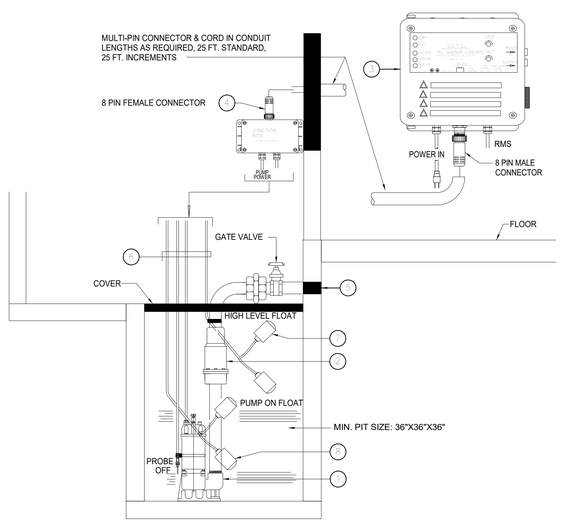

KEYED NOTES:

1. SP-1 STANCOR MODEL SE-100 SUBMERSIBLE EFFLUENT PUMP 1 HP, 460 VOLT, 3600 RPM, 2" DISCHARGE CONNECTION
2. STANCOR CHECK VALVE
3. STANCOR OIL MINDER 460V, 1Ø CONTROL SYSTEM WITH BUILT IN AUDIBLE AND VISUAL ALARM WHEN PUMP DOES NOT RUN DUE TO OIL IN PIT OR HIGH LIQUID ALARM. PROVIDE SILENCING BUTTON FOR AUDIBLE ALARM BUILT INTO PANEL. PANEL SHALL HAVE ADDITIONAL CONTACT FOR A REMOTE ALARM LOCATION. JUNCTION BOX WILL BE PROVIDED WITH MULTI-PIN CONNECTOR & CORD IN LENGTHS AS REQUIRED, 25 FT. IS STANDARD, OPTIONAL 25 FT. INCREMENTS ARE REQUIRED. LIGHTS FOR OIL SPILL, POWER, HIGH LIQUID LEVEL, OVERLOAD & PUMP RUN
4. JUNCTION BOX WILL BE PROVIDED WITH MULTI-PIN CONNECTOR AND CORD IN LENGTHS AS REQUIRED; 25 FT. IS STANDARD, OPTIONAL 25 FT. INCREMENTS AVAILABLE
5. ALL BURIED PUMP PRESSURE DISCHARGE PIPING SHALL BE PROTECTED WITH TAPECOAT CT CORROSION PROTECTION TAPE
6. OIL MINDER CABLE, POWER CABLE, PROBE CABLE, HIGH LIQUID ALARM CABLE & PUMP ON FLOAT CABLE.
7. HIGH LIQUID ALARM FLOAT WITH CLAMP DEVICE TO MOUNT TO PUMP DISCHARGE PIPING.
8. PUMP ON FLOAT.

9 ELEVATOR SUMP PUMP DETAIL

SCALE: NOT TO SCALE

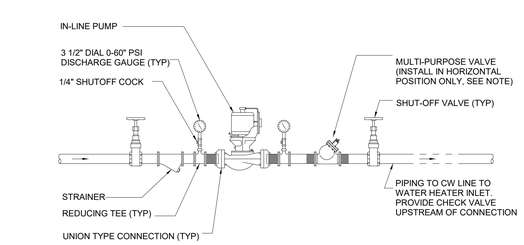

NOTES:

1. CONTRACTOR SHALL INSTALL AQUASTAT IN RETURN LINE FOR PUMP CONTROL
2. WHERE RE-CIRC. PIPING ON PUMP DISCHARGE IS LESS THAN 1-1/2", CONTRACTOR SHALL INSTALL SEPARATE CHECK VALVE, SHUT-OFF VALVE, AND BALANCE VALVE IN LIEU OF MULTI-PURPOSE VALVE.

3 IN-LINE RECIRCULATING PUMP DETAIL

SCALE: NOT TO SCALE

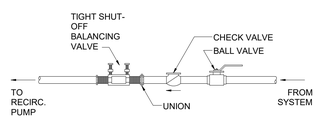

NOTES:

1. INSURE PROPER ACCESS IS PROVIDED TO VALVE AND THAT VALVE CAN BE METERED. DO NOT ORIENT TAPS DOWNWARD.
2. PROVIDE ACCESS PANEL IN HARD CEILING LOCATIONS.
3. PROVIDE TEE HANDLE WHERE LIMITED ACCESS.

7 HOT WATER CIRCULATION BALANCING VALVE DETAIL

SCALE: NOT TO SCALE

PARTS LIST		
SYM	QTY	PART
1	2	PUMP, EBARA MODEL 3U OR GOULDS MODEL SH
2	1	CAP, GROOVED, 304SS, 4"
3	2	VALVE, CHECK, TIGERFLOW 871W, 2-1/2"
4	4	VALVE, BUTTERFLY, TIGERFLOW L-ZH-L, 2-1/2"
5	1	PANEL STAND, TRIPLEX, PS004
6	2	VFD (NOT SHOWN)
7	1	CONTROLLER, TIGERFLOW MARK V, INTERNAL DRIVES

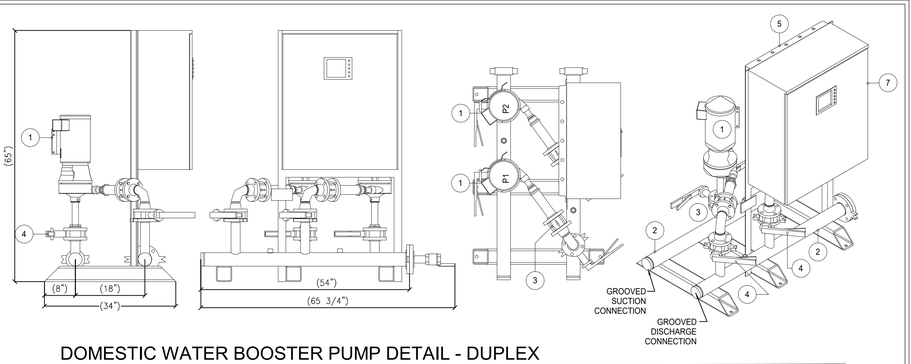

4 DOMESTIC WATER BOOSTER PUMP DETAIL - DUPLEX

SCALE: NOT TO SCALE

REVISION	DESCRIPTION	BY	DATE

ARCHITECT

MEP. ENG.

NIST

FOR OFFICIAL USE ONLY

U.S. DEPARTMENT OF COMMERCE

OFFICE OF FACILITIES & PROPERTY MANAGEMENT

NIST – MEDIUM OFFICE

PLUMBING DETAILS

P302

SH. NO. ___ OF ___ DWG. P302

APPROVED BY	DATE	SPONSOR	DATE	MAINTENANCE ENG. OFF.	DATE	ENVIRONMENTAL MANAGEMENT	DATE	SAFETY	DATE	SHED – NIST FIRE MARSHAL/AHJ	DATE	FACILITIES ENGR. OFF.	DATE	PROJECT LEADER: VAY	DATE	DRAWN BY: AA	DATE: 08/15/2022	PROJECT/ W.O. #: Project Number